RAYCOS LIGHTING

PROJECT NAME _____ DATE _____

NOTE _____

AMPLE OUTDOOR SERIES

AMPLE OUTDOOR WALL PACK

FIELD-SELECTABLE WATTAGE · FIELD-SELECTABLE CCT

AMPLE

LED OUTDOOR WALL PACK

A durable high-output wall pack with adjustable power and color temperature, wet-location construction, and a prismatic lens for broad exterior illumination.

- 80 / 100 / 120 W field-selectable output
- 3000 / 4000 / 5000 K field-selectable CCT
- 0-10 V dimming and 120-277 / 120-347 VAC input
- ADC12 die-cast housing for wet locations



POWER	CCT	RATED LIFE
80/100/120 W	3K/4K/5K	≥50,000 h

APPLICATIONS

Exterior commercial illumination

BUILDING PERIMETER
Facades + service areas

ENTRY
Doors + vestibules

WALKWAYS
Paths + corridors

LOADING
Docks + utility areas

ORDERING GUIDE

Selectable 120 W platform

Model	Selectable power	Input voltage	Selectable CCT	Dimming	Finish	Mounting
AMPLE-WP16GM-120W-H-TCP	80 / 100 / 120 W	120-277 / 120-347 VAC	3000 / 4000 / 5000 K	0-10 V	Brown	Fixed bracket

PRODUCT VIEWS

Original fixture details retained



SIDE PROFILE
Conduit knockouts



FRONT VIEW
Prismatic lens



INTERNAL CONTROLS
Wattage + CCT selectors

SERIES HIGHLIGHTS

EFFICACY
> 120 lm/W

BEAM
70° × 110°

ENVIRONMENT
Wet location

TEMPERATURE
-40°F to 104°F

MATERIAL
ADC12 aluminum

MOUNTING
Fixed bracket

cULus LISTED · E468007 FILE · WET LOCATION · 0-10V DIMMING

Adjustable power · adjustable CCT · sealed wall-mount construction

RAYCOS LIGHTING

PROJECT NAME _____ **DATE** _____

NOTE _____

AMPLE OUTDOOR SERIES

DIMENSIONS + SPECIFICATIONS

TWO SOURCE HOUSING DRAWINGS

The original sheet includes compact and large housing dimensions. Inches are retained as the primary units.

MODEL PLATFORM

AMPLE-WP16GM-120W-H-TCP · selectable 80 / 100 / 120 W · fixed wall bracket.

PRODUCT DIMENSIONS

Original line art cleaned and sharpened

COMPACT HOUSING

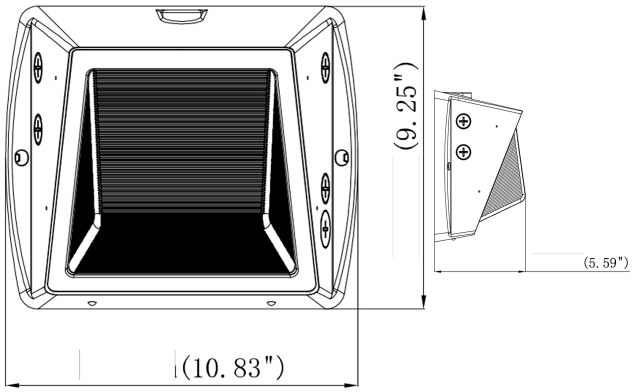

OVERALL SIZE **10.83" W × 9.25" H × 5.59" D**

Front and side views shown above are redrawn directly from the source dimension sheet.

LARGE HOUSING

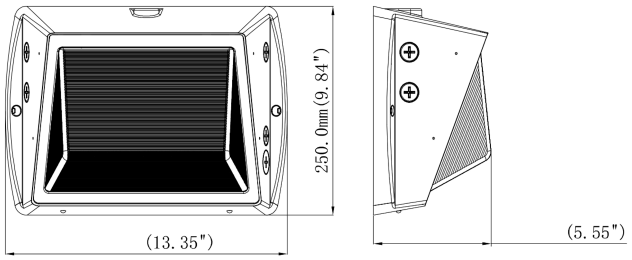

OVERALL SIZE **13.35" W × 9.84" H × 5.55" D**

Front and side views shown above are redrawn directly from the source dimension sheet.

TECHNICAL SPECIFICATIONS

Source values retained

Model	AMPLE-WP16GM-120W-H-TCP
Power	80 / 100 / 120 W
Working voltage	AC 120-277 V / 120-347 V
Wattage selection	120 / 100 / 80 W
Beam angle	70° × 110°
Color temperature	3000 / 4000 / 5000 K
Luminous efficacy	> 120 lm/W
Color rendering index	Ra > 70
Operating temperature	-40°F to +104°F
Storage temperature	-40°F to +158°F
Environment	Wet location
Rated life	≥ 50,000 hours
Housing material	ADC12 die-cast aluminum
Housing color	Brown
Mounting	Fixed bracket

RAYCOS LIGHTING

PROJECT NAME _____ DATE _____

NOTE _____

AMPLE OUTDOOR SERIES

LIGHTING PARAMETERS + OPTICS

SELECTABLE PERFORMANCE

AMPLE-WP16GM-120W-H-TCP

POWER	CCT	EFFICACY	RATED LIFE
80/100/120 W	3000/4000/5000 K	> 120 lm/W	≥ 50,000 h

LIGHTING PARAMETERS

Electrical · optical · construction

Power	80 / 100 / 120 W
Input voltage	120-277 / 120-347 VAC
Selectable wattage	80 / 100 / 120 W
Selectable CCT	3000 / 4000 / 5000 K
Beam angle	70° × 110°
Luminous efficacy	> 120 lm/W
CRI	Ra > 70
Dimming	0-10 V
Environment	Wet location
Mounting	Fixed bracket

PERFORMANCE SUMMARY

120+	70×110	3 CCT	WET
LM/W	BEAM	SELECT	LOCATION

TEMPERATURE RANGE

Operating: -40°F to +104°F

Storage: -40°F to +158°F

CONSTRUCTION

ADC12 die-cast aluminum housing with a fixed wall bracket and prismatic lens. Housing color listed in the source: brown.

OPTICAL PROPERTIES

Vector-clean representative intensity distribution

LUMINOUS INTENSITY DISTRIBUTION

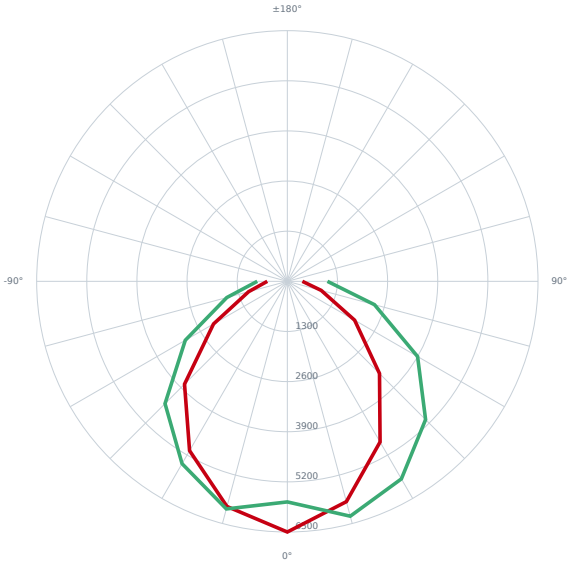

PHOTOMETRIC SUMMARY

Unit	**cd**
C0 / C180	**83.1°**
C90 / C270	**104.7°**
Average beam angle (50%)	**93.9°**
Maximum scale	**6500 cd**
Source beam angle	**70° × 110°**

Source curve redrawn as clean vector line art. Published beam values are retained above.

RAYCOS LIGHTING

PROJECT NAME _____ **DATE** _____

NOTE _____

AMPLE OUTDOOR SERIES

INSTALLATION GUIDE · STEPS 1-6

BEFORE INSTALLATION

Qualified personnel · applicable electrical codes

POWER OFF

TURN POWER OFF BEFORE INSTALLATION OR SERVICING

Confirm the mounting surface, junction box, supply wiring, and 0-10 V leads before opening the fixture.

Line: black · Neutral: white · Ground: green · Dimming: connect to the driver-labeled DIM+ and DIM- leads.

INSTALLATION STEPS

Original diagrams cleaned for print

1 REMOVE RUBBER PLUG

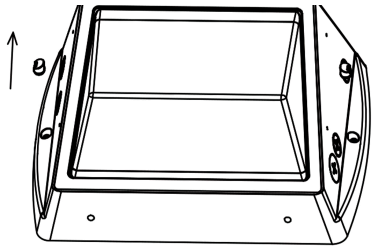

Remove the rubber plug to expose the side fastener.

2 REMOVE BOTTOM SCREWS

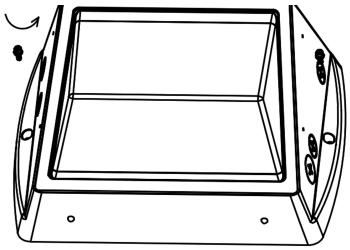

Remove the cap screws from the bottom of the fixture.

3 RELEASE MOUNTING PLATE

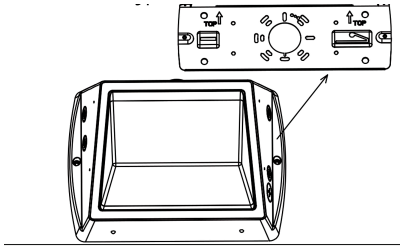

Lift the mounting plate away from the housing.

4 SEPARATE MOUNTING PLATE

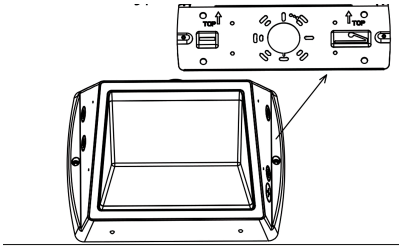

Fully separate and orient the mounting plate with TOP upward.

5 HANG SAFETY SLING

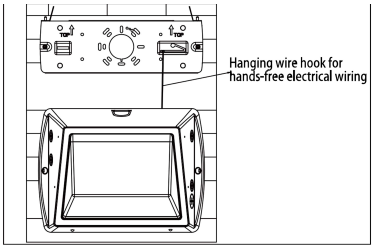

Hang the sling over the mounting plate for hands-free wiring.

6 CONNECT AND SET

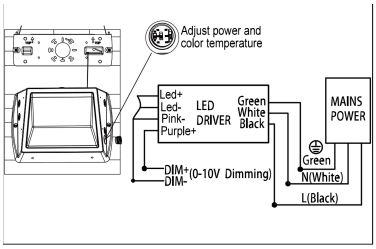

Connect mains, ground, and dimming leads; then set wattage and CCT.

RAYCOS LIGHTING

PROJECT NAME _____ **DATE** _____

NOTE _____

AMPLE OUTDOOR SERIES

INSTALLATION GUIDE · STEPS 7-9

CLOSE + WEATHER-SEAL

Complete all wiring checks before closing the housing

7 ENGAGE MOUNTING BASE

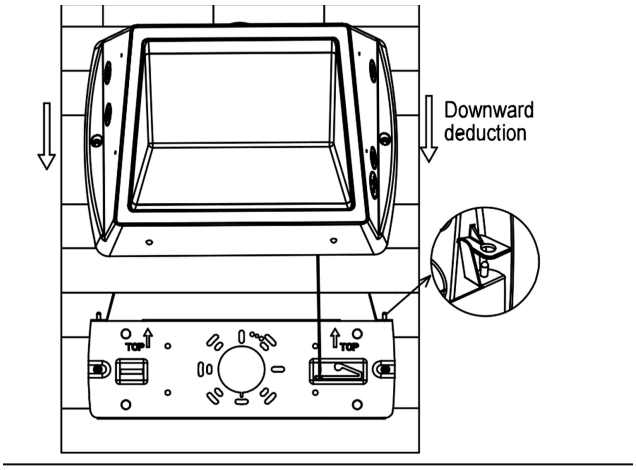

Buckle the lamp body onto the mounting base and slide it downward until seated.

8 REINSTALL HARDWARE

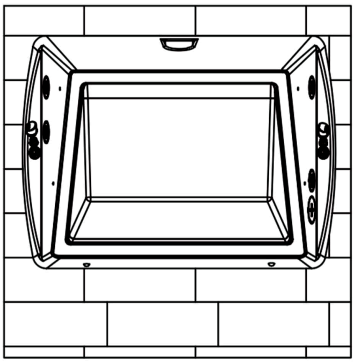

Install the cap screws and rubber plugs; confirm both sides are secure.

9 SEAL WALL INTERFACE

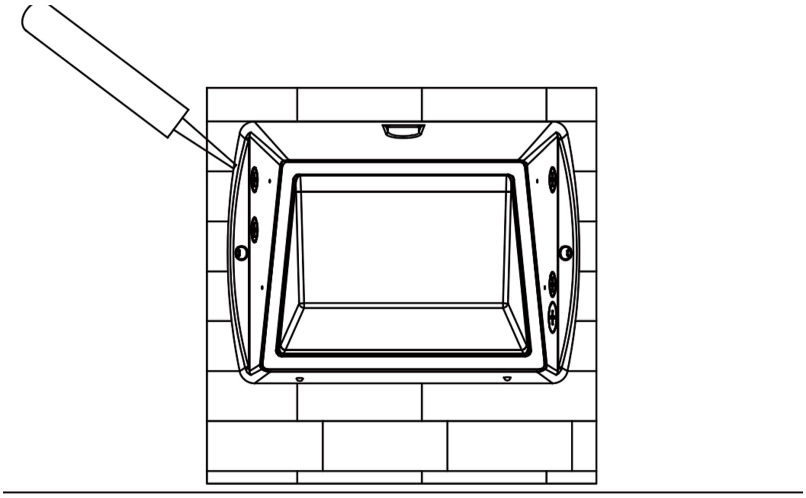

Fill the gap between the fixture and wall with exterior-grade silicone sealant so rainwater cannot enter the junction box.

COMMISSIONING CHECKLIST

- ☐ Mounting base secure
- ☐ Fixture seated and level
- ☐ Power and CCT selected
- ☐ Cap screws and plugs installed
- ☐ Perimeter sealed
- ☐ Operation verified